Current part is item (10) on diagram. Available at www.oshkoshequipment.com

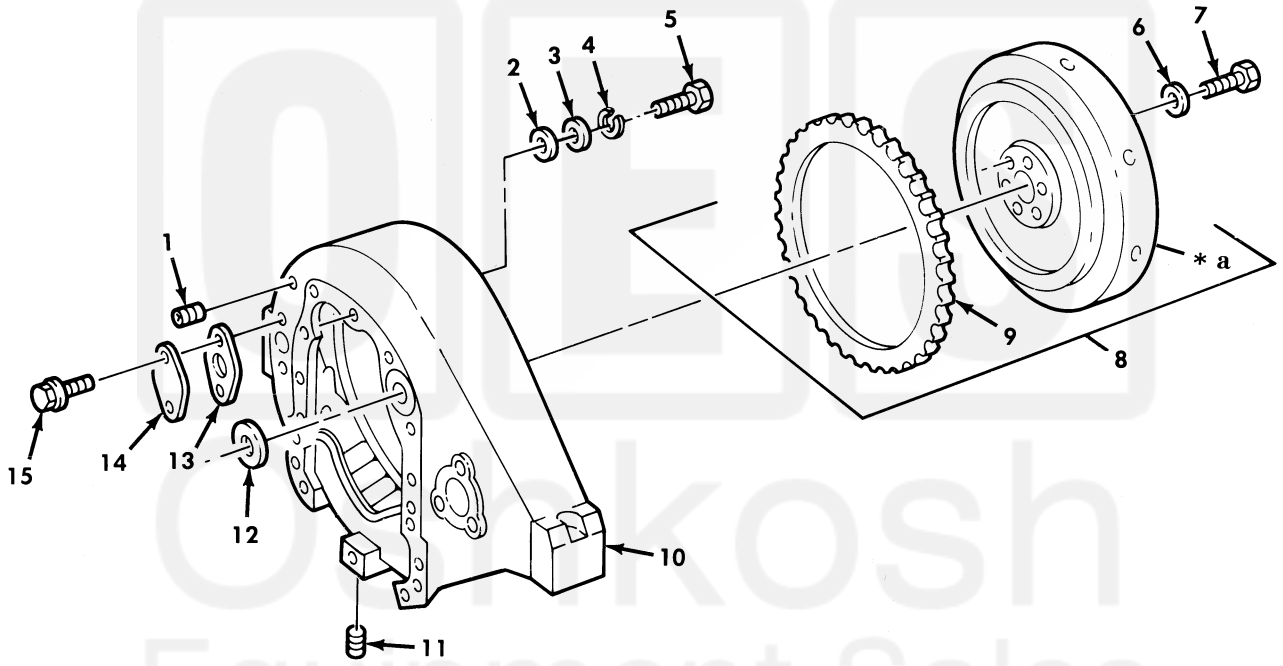

*** a PART OF ITEM 8**

Figure 8. Flywheel Gear Assembly and Housing.

Current part is item (10) on diagram. Available at www.oshkoshequipment.com

Current part is item (10) on diagram. Available at www.oshkoshequipment.com

(1) ITEM NO	(2) SMR CODE	(3) NSN	(4) CAGEC	(5) PART NUMBER	(6) DESCRIPTION AND USABLE ON CODE (UOC)	(7) QTY
					GROUP 0103 FLYWHEEL ASSEMBLY	
					FIG. 8 FLYWHEEL GEAR ASSEMBLY AND HOUSING	
1	PAFZZ	4730-00-018-9566	81348	WW-P-471ACABCA	PLUG,PIPE.....	1
2	PAFZZ	5330-00-404-2920	15434	172648	PACKING,PREFORMED PART OF KIT P/N 3011472.....	9
3	PAFZZ	5310-00-081-8500	15434	127316	WASHER,RECESSED.....	9
4	PAFZZ	5310-00-820-6653	96906	MS35338-50	WASHER,LOCK.....	9
5	PAFZZ	5305-01-205-3407	15434	138042	SCREW,MACHINE.....	9
6	PAFZZ	5310-00-134-4171	15434	200861	WASHER,FLAT.....	6
7	PAFZZ	5305-00-795-9336	15434	204165	SCREW,CAP.....	6
8	PAFFF	2815-00-404-2916	15434	3028513	FLYWHEEL,ENGINE.....	1
9	PBFZZ	3020-00-528-5053	15434	4797	.GEAR,SPUR.....	1
10	PFFZZ	2805-00-404-2917	15434	3014979	HOUSING,FLYWHEEL.....	1
11	PAFZZ	4730-01-106-0202	15434	3008469	PLUG,PIPE.....	1
12	PAFZZ	5330-00-729-4427	15434	9333-1	GASKET PART OF KIT P/N 3011472.....	1
13	PAFZZ	5330-01-082-6985	15434	3021735	GASKET.....	1
14	PFFZZ	5340-01-122-8002	15434	70657	COVER,ACCESS.....	1
15	PAFZZ	5305-01-135-5344	15434	3011342	SCREW.....	2

END OF FIGURE

Current part is item (10) on diagram. Available at www.oshkoshequipment.com